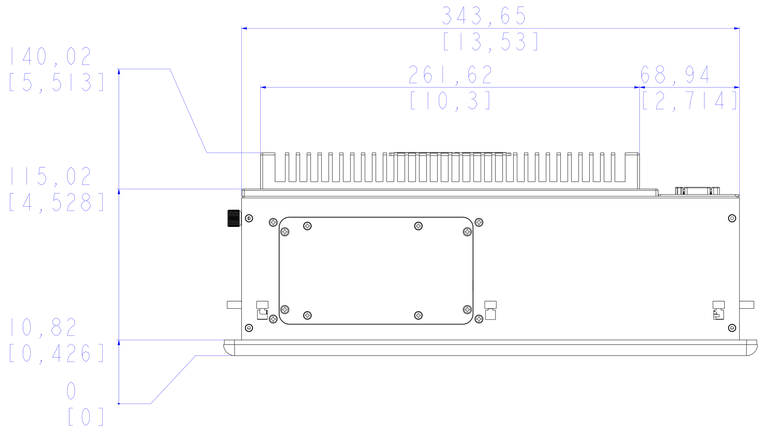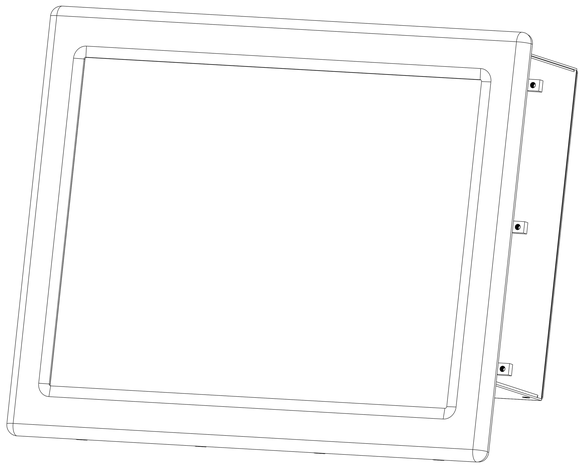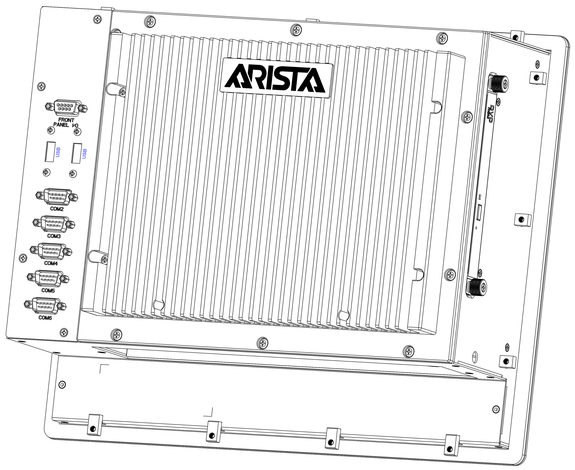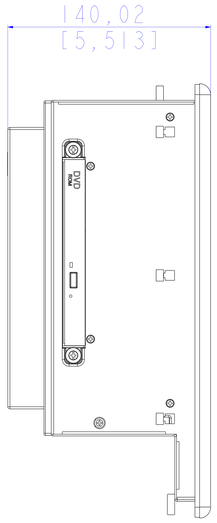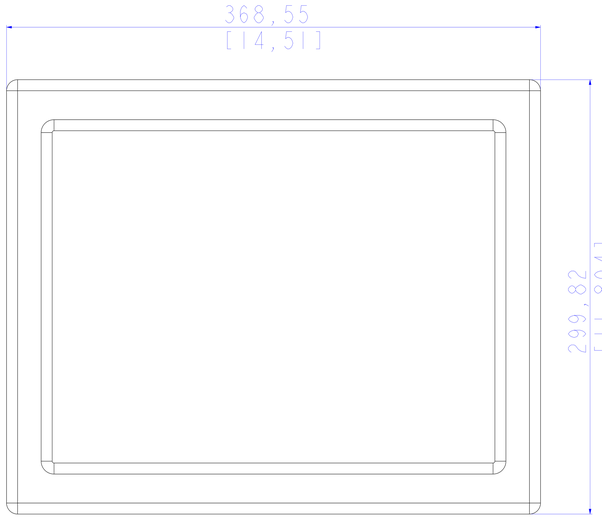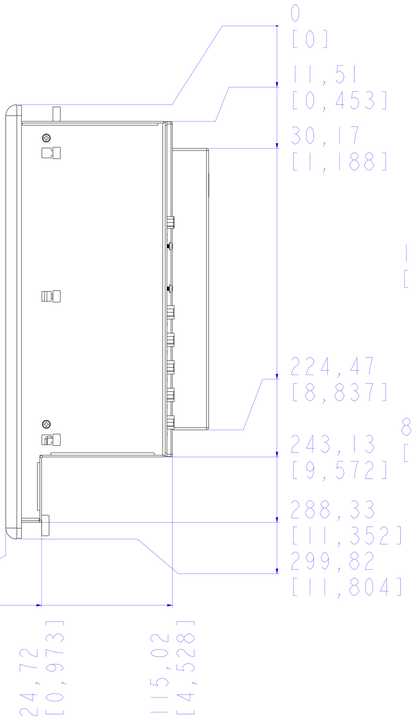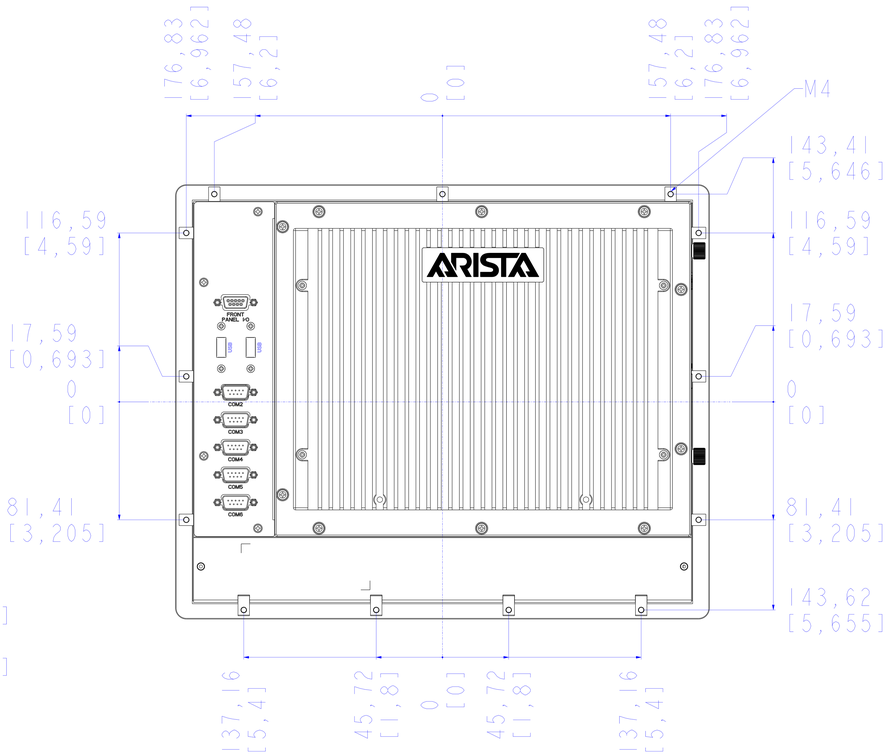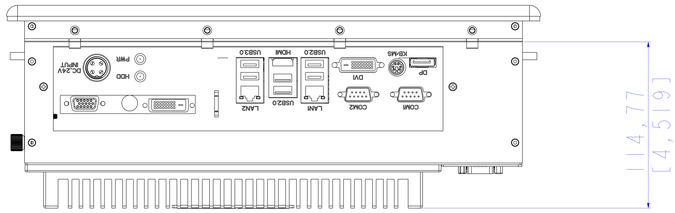ARP-2215AP-G01